PRESSURE VACUUM RELIEF VALVE VENT TO ATMOSPHERE

BREATHER VALVE

BV/BS TYPE

Benefits

- Designed according to the API 2000 standard.
- Reliable operations reduces vapor losses
- Suitable and compact design ensures long-term maintenance free life cycle
- Full lifting and high flow capacity
- Meet API leak test requirement
- No need inside maintenance
- Available outside inspection, cleaning and maintenance without disassembling

General

The model BV/BS pressure vacuum relief valves designed manufactured and tested according to the API 2000 standard.

The model BV/BS pressure vacuum relief valves used to relieve excess pressure and vacuum that has developed in a tank.

To avoid product loss, BV/BS pressure vacuum relief valves are recommended for use on atmospheric storage tank.

The set pressure and relieving pressure shall be consistent with the requirements of the standard according to which the thank was designed and fabricated. The model BV/BS can be manufactured the range of pressure and vacuum setting form ±22 mm W.C to ±8000 mm W.C.

The model BV type is weight-loaded type with minimum setting ±22 mm W.C and maximum setting ±700 mm W.C.

The model BS type is spring-loaded type over weight loaded type.

The materials for BV/BS shall be selected for the stored-product service temperatures and pressures. Also, the materials should be compatible with the product stored in the tank and with any products formed in the vicinity of the relief valve during filling and discharge. Usually the materials are available in Aluminum, Carbon Steel, Stainless Steel grade 304, 316 and 316L to suit individual requirements.

PROSAVE
ISO 9001 Registered

115-22, Tekeunobaelli 1-ro, Jillye-myeon, Gimhae-si,
Gyeongsangnam-do 50875, Korea
TEL. +82 (0)55 313 3510~1 FAX. +82 (0)55 313 3512
E-mail: prosave@prosave.co.kr www.prosave.co.kr

PRESSURE VACUUM RELIEF VALVE VENT TO ATMOSPHERE

BREATHER VALVE

BV/BS TYPE

BV Weight Loaded Type

For high pressure setting, **BS** Type Spring Loaded Valve are available on request.

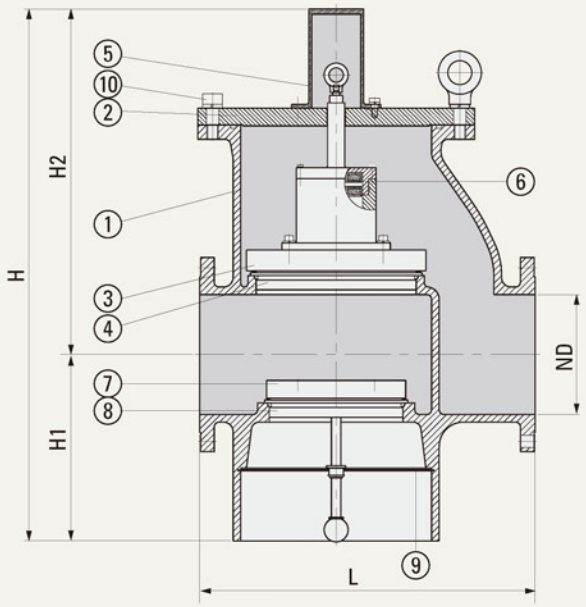

Dimension Table

Unit = mm

	DIMENSION (MM)					WEIGHT (KG)
TYPE	ND	L	H	H1	H2	
BVA 10 x 10	250	700	1110	390	720	
BVA 12 x 12	300	880	1340	420	920	
BVA 14 x 14	350	950	1400	430	970	
BVA 16 x 16	400	1015	1610	520	1090	
BVA 18 x 18	450	1175	1680	565	1115	

Materials of Construction

NO.	DESCRIPTION	SPEC.1	SPEC.2	SPEC.3
1	BODY	CARBON STEEL	STAINLESS STEEL 304	STAINLESS STEEL 316
2	COVER	CARBON STEEL	STAINLESS STEEL 304	STAINLESS STEEL 316
3	PRESSURE DISC ASS'Y	STAINLESS STEEL 304	STAINLESS STEEL 304	STAINLESS STEEL 316
4	PRESSURE SEAT	STAINLESS STEEL 304	STAINLESS STEEL 304	STAINLESS STEEL 316
5	CAP	CARBON STEEL	STAINLESS STEEL 304	STAINLESS STEEL 316
6	SET ADJUSTER	CAPSULATED MAGNET	CAPSULATED MAGNET	CAPSULATED MAGNET
7	VACUUM DISC	STAINLESS STEEL 304	STAINLESS STEEL 304	STAINLESS STEEL 316
8	VACUUM SEAT	STAINLESS STEEL 304	STAINLESS STEEL 304	STAINLESS STEEL 316
9	FLAME SCREEN	STAINLESS STEEL 316	STAINLESS STEEL 316	STAINLESS STEEL 316
10	BOLT	STAINLESS STEEL 304	STAINLESS STEEL 304	STAINLESS STEEL 316

* Other material is available on special request by customers

PROSAVE CO., LTD.
ISO 9001 Registered

115-22, Tekeunobaelli 1-ro, Jillye-myeon, Gimhae-si, Gyeongsangnam-do 50875, Korea
TEL. +82 (0)55 313 3510~1 FAX. +82 (0)55 313 3512
E-mail: prosave@prosave.co.kr www.prosave.co.kr